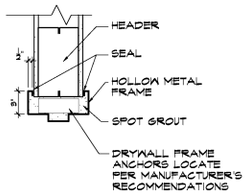

H-1

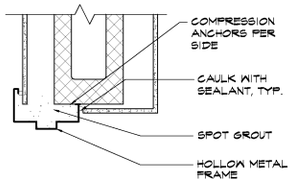

H-2

HEAD TYPE

SCALE: 1-1/2" = 1'-0"

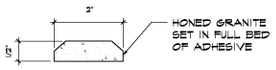

S-1
GRANITE

S-2
ALUMINUM

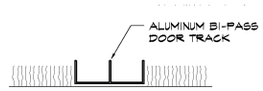

S-3
ALUMINUM

SILL TYPE

SCALE: 1-1/2" = 1'-0"

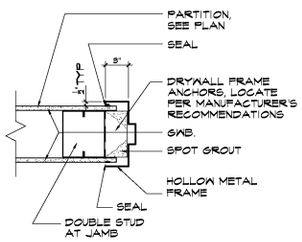

J-1

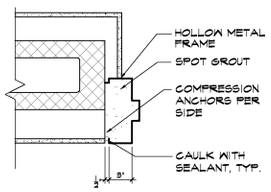

J-2

JAMB TYPE

SCALE: 1-1/2" = 1'-0"

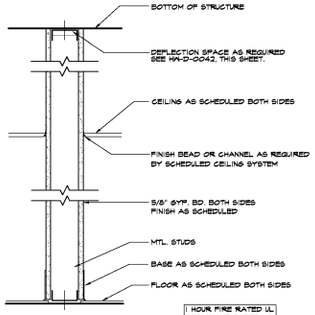

S6 DRYWALL PARTITION
6" MTL. STUDS @ 16" O.C.

S4 DRYWALL PARTITION
3 5/8" MTL. STUDS @ 16" O.C.

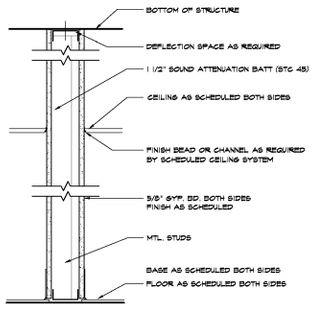

S4 DRYWALL PARTITION
3 5/8" MTL. STUDS @ 24" O.C.
SOUND INSULATED

S6 DRYWALL PARTITION
6" MTL. STUDS @ 24" O.C.
SOUND INSULATED

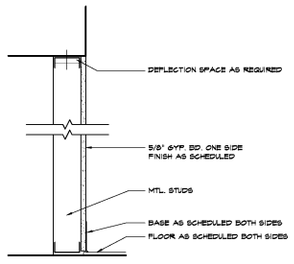

F2 DRYWALL FURRING
1 1/2" MTL. Z CHANNEL WITH 1 1/2" Z-MATE INS.

F3 DRYWALL FURRING
2 1/2" MTL. STUDS @ 24" O.C.

F4 DRYWALL FURRING
3 5/8" MTL. STUDS @ 24" O.C.

PARTITION SCHEDULE

SCALE: 1-1/2" = 1'-0"

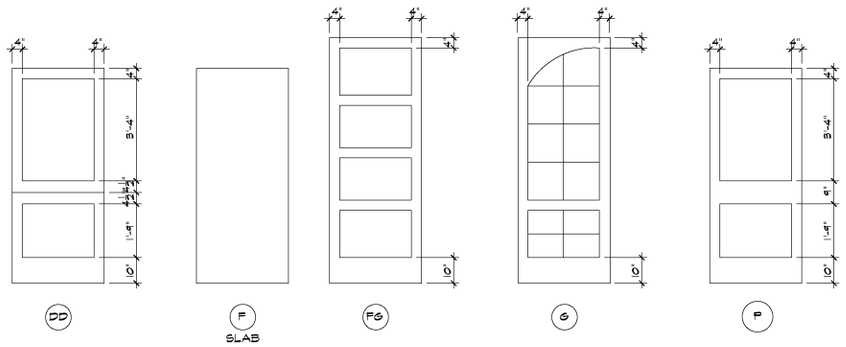

DOOR TYPES

SCALE: 1/2" = 1'-0"

HARDWARE SETS:

1	1 CYLINDER
2	6 HINGES, BALL-BEARING 2 LEVER PASSAGE SETS WITH OUT LATCH
3	3 HINGES, BALL-BEARING 1 LEVER PASSAGE SET
4	4 HINGES, BALL-BEARING 1 FLUSH BOLT 1 LEVER LOCK SET
5	3 HINGES, BALL-BEARING 1 LEVER LOCK SET
6	1 PUSH PLATE 1 PULL 3 HINGES, BALL-BEARING 1 OVERHEAD CLOSER
7	1 FLUSH PLATE 1 LEVER LOCKSET 6 HINGES, BALL-BEARING 1 LEVER DUMMY TRIM 2 CLOSERS
8	1 FLUSH PLATE 1 PULL 3 HINGES, BALL-BEARING 1 OVERHEAD CLOSER (ABOVE HARDWARE PER LEAF)
9	3 HINGES, BALL-BEARING 1 LEVER LOCK SET, PRIVACY
10	3 HINGES, BALL-BEARING 1 WEATHERSTRIPPING KIT 1 LEVER LOCK SET

DOOR SCHEDULE

LOCATION	DOOR NO.	DOOR SIZE W	DOOR SIZE H	DOOR THK	DOOR MATL	DOOR TYPE	FRAME DETAIL JAMB	FRAME DETAIL SILL	FRAME DETAIL HEAD	FRAME TYPE	FRAME MATL	FIRE RATING LAB	FIRE RATING HRS	SELF-CLOSING	HARDWARE	WEATHERSTRIP	NOTES
FIRST FLOOR	101A	3'-0"	8'-0"	1 3/4"	AL/GL	G	-	S-2	-	-	-				1		
	101B	3'-0"	8'-0"	1 3/4"	AL/GL	G	-	S-2	-	-	-				1		
	101C	3'-0"	8'-0"	1 3/4"	AL/GL	G	-	S-2	-	-	-				1		
	101D	3'-0"	8'-0"	1 3/4"	AL/GL	G	-	S-2	-	-	-				1		
	105A	3'-0"	8'-0"	1 3/4"	SC/WD	FG	J-1	-	H-1	HM	KD				2		
	105B	3'-0"	8'-0"	1 3/4"	SC/WD	FG	J-1	-	H-1	HM	KD				2		
	105	3'-0"	7'-0"	1 3/4"	SC/WD	P	J-2	-	H-2	HM	KD				3		
	106	3'-0"	7'-0"	1 3/4"	SC/WD	DD	J-1	-	H-1	HM	KD				4		
	107	3'-0"	7'-0"	1 3/4"	SC/WD	P	J-1	-	H-1	HM	KD				5		
	108	3'-0"	7'-0"	1 3/4"	SC/WD	P	J-1	S-1	H-1	HM	KD				6		
	109	3'-0"	7'-0"	1 3/4"	SC/WD	P	J-1	S-1	H-1	HM	KD				6		
	110	3'-0"	7'-0"	1 3/4"	SC/WD	P	J-1	S-1	H-1	HM	KD				6		
	112	(2) 3'-0"	7'-0"	1 3/4"	SC/WD	P	J-1	-	H-1	HM	KD		1		7		
	112A	(2) 3'-0"	7'-0"	1 3/4"	SC/WD	P	J-1	-	H-1	HM	KD		1		7		
	114A	*	*	*	SC/WD	P	-	-	-	-	(E)				8		* TO FIT EXISTING OPENING
	114B	*	*	*	SC/WD	P	-	-	-	-	(E)				8		* TO FIT EXISTING OPENING
	114C	*	*	*	SC/WD	P	-	-	-	-	(E)				8		* TO FIT EXISTING OPENING
	114D	*	*	*	SC/WD	P	-	-	-	-	(E)				8		* TO FIT EXISTING OPENING
	114E	3'-0"	7'-0"	1 3/4"	SC/WD	P	J-2	-	H-2	HM	KD				5		
MEZZANINE	201	3'-0"	7'-0"	1 3/4"	SC/WD	P	J-1	S-2	H-1	KD	HM				10		
	203	3'-0"	7'-0"	1 3/4"	SC/WD	P	J-1	S-1	H-1	KD	HM				9		
	204	(2) 1'-6"	5'-0"	1 3/4"	SC/WD	F	-	S-3	-	ALUM	-				-		

System No. HW-D-0042
Assembly Ratings - 1 and 2 Hr (See Items 2 & 3A)
Joint Width - 1 In. Max
Class II Movement Capabilities - 50% Compression or Extension

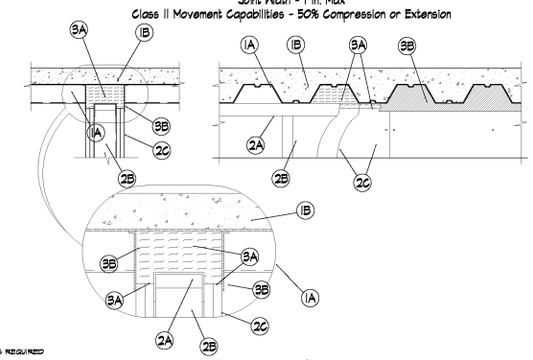

1. **Floor Assembly** The fire-rated fluted steel deck/concrete floor assembly shall be constructed of the materials and in the manner described in the individual Floor-Ceiling Design in the UL Fire Resistance Directory and shall include the following construction features:
   A. **Steel Floor And Form Units*** Max 3 in. deep galv steel fluted units.
   B. **Concrete** Min 2-1/2 in. thick reinforced concrete, as measured from the top plane of the floor units.
   C. **Spray-Applied Fire Resistive Materials*** (Optional)---(Not Shown)---Prior to the installation of the steel ceiling runners, Forming Material and Fill, Void or Cavity Material (Items 2A, 3A, 3B) the steel floor units may be sprayed with a min 5/16 in. to max 1-3/4 in. thickness of fire resistive material.
   W R GRACE & CO - CONN
   CONSTRUCTION PRODUCTS DIV - Type MK-6-HY
2. **Wall Assembly** The 1 or 2 hr fire rated gypsum board/steel stud wall assembly shall be constructed of the materials and in the manner described in the individual U400-Series Wall or Partition Design in the UL Fire Resistance Directory and shall include the following construction features:
   A. **Steel Floor And Ceiling Runners** Floor and ceiling runners of wall assembly shall consist of min 25 ga galv steel channels sized to accommodate steel studs (Item 2B). Ceiling runner to be provided with 2 in. flanges. Ceiling runner secured to valleys of steel floor units (Item 1A) through fire resistive material with steel fasteners or welds spaced max 12 in. OC. When optional spray applied material is used on the steel floor units, steel ceiling runner shall be secured through the spray applied material to each valley of floor unit with min 3/16 in. diam steel masonry anchors.

   A1. **Light Gauge Framing*-Slotted Ceiling Runner** As an alternate to the ceiling runner in Item 2A, slotted ceiling runner to consist of galv steel channel with slotted flanges sized to accommodate steel studs (Item 2B). Slotted ceiling runner installed perpendicular to direction of fluted steel floor units and secured to valleys with steel fasteners spaced max 24 in. OC.
   SLIPTRACK SYSTEMS INC --- ---SLP-TRK

   A2 . **Light Gauge Framing*-Vertical Deflection Ceiling Runner** As an alternate to the ceiling runners in Items 2A and 2A1, vertical deflection ceiling runner to consist of galv steel channel with slotted vertical deflection clips mechanically fastened within runner. Slotted clips, provided with step bushings, for permanent fastening of steel studs. Flanges sized to accommodate steel studs (Item 2B). Vertical deflection ceiling runner installed perpendicular to direction of fluted steel floor units and secured to valleys with steel fasteners spaced max 24 in. OC .
   THE STEEL NETWORK INC -- VertiTrack VTD250, VTD358, VTD400, VTD600 and VTD800
   B. **Studs** Steel studs to be min 2-1/2 in. wide. Studs cut 1/2 to 3/4 in. less in length than assembly height with bottom nesting in and resting on floor runner and with top nesting in ceiling runner without attachment. When slotted ceiling runner (Item 2A1) is used, steel studs secured to slotted ceiling runner with No. 8 by 1/2 in. long wafer head steel screws at midheight of slot on each side of wall. Stud spacing not to exceed 24 in. OC. When vertical deflection ceiling runner (Item 2A2) is used, steel studs secured to slotted vertical deflection clips, through the bushings, with steel screws at midheight of each slot. Stud spacing not to exceed 24 in. OC .
   C. **Gypsum Board*** Gypsumboard installed to a min total thickness of 5/8 in. and 1-1/4 in. on each side of wall for 1 and 2 hr rated assemblies, respectively. Wall to be constructed as specified in the individual Wall and Partition Design in the UL Fire Resistance Directory, except that a max 1 in. gap shall be maintained between the top of the gypsumboard and the bottom of the steel floor units and the top row of screws shall be installed into the studs 3-1/2 to 4 in. below the lower surface of the floor.
3. **Joint System** Max separation between bottom of floor and top of wall at time of installation of joint system is 1 in. The joint system is designed to accommodate a max 50 percent compression or extension from its installed width. The joint system consists of forming material and a fill material, as follows:
   A. **Forming Material*** Min 8 pcf density mineral wool batt insulation cut approx 25 percent wider than the flutes and with a length approx equal to the overall thickness of the wall. Multiple pieces stacked on top of each other, as needed, and then compressed 50 percent in thickness and inserted into the flutes of the steel floor units above the top of the ceiling runner. The mineral wool batt insulation is to project beyond each side of the ceiling runner, flush with wall surfaces. Nom 5/8 in. and 1-1/4 in. wide strips for 1 and 2 hr rated assemblies, respectively, of min 8 pcf mineral wool batt insulation are to be cut to fill the gap between the top of the gypsumboard and bottom of the steel floor units. The strips of mineral wool are compressed 50 percent and lightly packed, cut edge first, into the gap between the top of the gypsumboard and bottom of the steel floor units on both sides of the wall.
   ROCK WOOL MANUFACTURING CO --- Delta-BA
   B. **Fill, Void or Cavity Material*** Min 1/8 in. wet thickness of fill material sprayed or troweled on each side of the wall to completely cover mineral wool forming material and to overlap a min of 1/2 in. onto gypsumboard and steel deck on both sides of wall. When Spray-Applied Fire Resistive Material* is applied to the Steel Floor and Form Units*, the fill material is to overlap the gypsumboard a min of 1/2 in. and the Spray-Applied Fire Resistive Material a min of 2 in. on both sides of wall. When spray-applied fire resistive materials are used, the CP 672 firestop spray shall overlap the wall a min 1/2 in. and overlap the spray-applied fire resistive material a min of 2 in. on both sides of the wall.
   HILTI CONSTRUCTION CHEMICALS, DIV OF
   HILTI INC - CP 672 Firestop Spray

*Bearing the UL Classification Mark

System No. C-AJ-1151
F Rating - 2 Hr
T Rating - 0 Hr
L Rating At Ambient - Less Than 1 CFM/Sq Ft
L Rating At 400 F - 4 CFM/Sq Ft

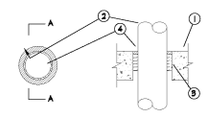

SECTION A-A

1. **Floor or Wall Assembly** - Min 3-1/2 in. thick reinforced lightweight or normal weight (100-150 pcf) concrete floor or min 4-1/2 in. thick reinforced lightweight or normal weight concrete wall. Wall may also be constructed of any UL Classified **Concrete Blocks *.** Max diam of opening is 6 in.
   See **Concrete Blocks** (CAZT) category in the Fire Resistance Directory for names of manufacturers.
2. **Through Penetrants** - One metallic pipe or conduit to be installed within the firestop system. Pipe or conduit to be rigidly supported on both sides of floor or wall assembly. The annular space shall be min 3/4 in. to max 7/8 in. the following types and sizes of metallic pipes or conduits may be used:
   A. Steel Pipe - Nom 4 in. diam (or smaller) Schedule 40 (or heavier) steel pipe.
   B. Conduit - Nom 4 in. diam (or smaller) steel conduit.
3. **Packing Material** - Min 2-1/2 in. thickness of min 4.0 pcf mineral wool batt insulation firmly packed into opening as a permanent form. Packing material to be recessed from top surface of floor or from both surfaces of wall as required to accommodate the required thickness of fill material.
4. **Fill, Void or Cavity Material*** - **Sealant** - Min 1 in. thickness of fill material applied within the annulus, flush with top surface of floor or with both surfaces of wall.
   HILTI CONSTRUCTION CHEMICALS, DIV OF
   HILTI INC - CP-6015, CP606 or FS-ONE Sealant
   (Note: L Ratings apply only when FS-ONE Sealant is used).

*Bearing the UL Classification Marking

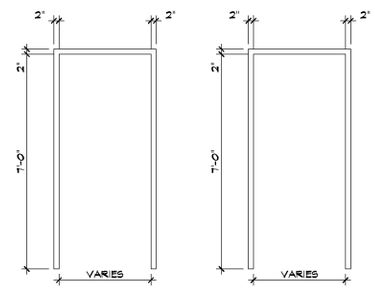

KD
KNOCKDOWN

W
WELDED

FRAME TYPES

SCALE: 1/2" = 1'-0"

ES-A ARCHITECTS

ELKIN / SOBOLTA & ASSOCIATES
19 PARK AVENUE RUTHERFORD NJ 07070-1711
VOICE 201.933.5511 FAX 201.933.9722

MICHAEL A. ELKIN, AIA
NJ LICENSE C-6697
NY LICENSE 14760

MODESTE A. SOBOLTA, AIA
N.J. LIC. C-5943
CT. LIC. 8203

STRUCTURAL
ALLIED ENGINEERING ASSOCIATES
925 MARIE COURT FRANKLIN LAKES, NJ 07417
VOICE 201.677.1744 FAX 201.677.0249

ELECTRICAL/MECHANICAL DESIGN CONSULTANTS
A/C DESIGN
79 BEAVER AVENUE CLINTON, NJ 08809
VOICE 908.238.9035 FAX 908.238.9036

MECHANICAL DESIGN CONSULTANTS
J.A.R. Engineering, Inc.
Engineering Consultants
14 COMMERCE STREET - SUITE #110
FLEMINGTON, NEW JERSEY 08822
TEL(908)284-9040 FAX(908)284-9095
www.jarengineering.com
Cert. Of Authorization #24GA27968000

Robert L. Ghittenden, PE
N.J Professional Engineer License #GE-42241

COPYRIGHT 2009 ELKIN/SOBOLTA AND ASSOCIATES

THESE DRAWINGS ARE INSTRUMENTS OF THE ARCHITECTS SERVICE AND ARE THE PROPERTY OF THE ARCHITECTS. REPRODUCTION OF THESE DRAWINGS OR REUSE OF THE INFORMATION CONTAINED HEREIN, IN ANY WAY OR FOR ANY PURPOSE, IS PROHIBITED WITHOUT THE EXPRESS WRITTEN APPROVAL OF THE ARCHITECT.

THESE DRAWINGS ARE ONLY INTENDED TO GRAPHICALLY DESCRIBE THE GENERAL NATURE AND SCOPE OF THE ARCHITECTS WORK. FIELD CONDITIONS MUST BE VERIFIED PRIOR TO THE START OF ANY CONSTRUCTION BASED ON THE DRAWINGS.

REV	DATE	DESCRIPTION
	10.30.09	PERMIT ISSUE
	9.28.09	50% CD ISSUE

THE FIESTA

CASA DE ROSA ROOM ALTERATIONS

NJ ROUTE 17 WOOD-RIDGE
NEW JERSEY 07075

OWNER:

DELDOR REALTY
359 NJ ROUTE 17 SOUTH
WOOD-RIDGE, NJ 07075

DRAWING TITLE

DOOR SCHEDULES, DETAILS AND PARTITION TYPES

PROJ. NO. 1260-09 SCALE: AS SHOWN
DRAWN: RLZ CKD: TB
DATE:

A601